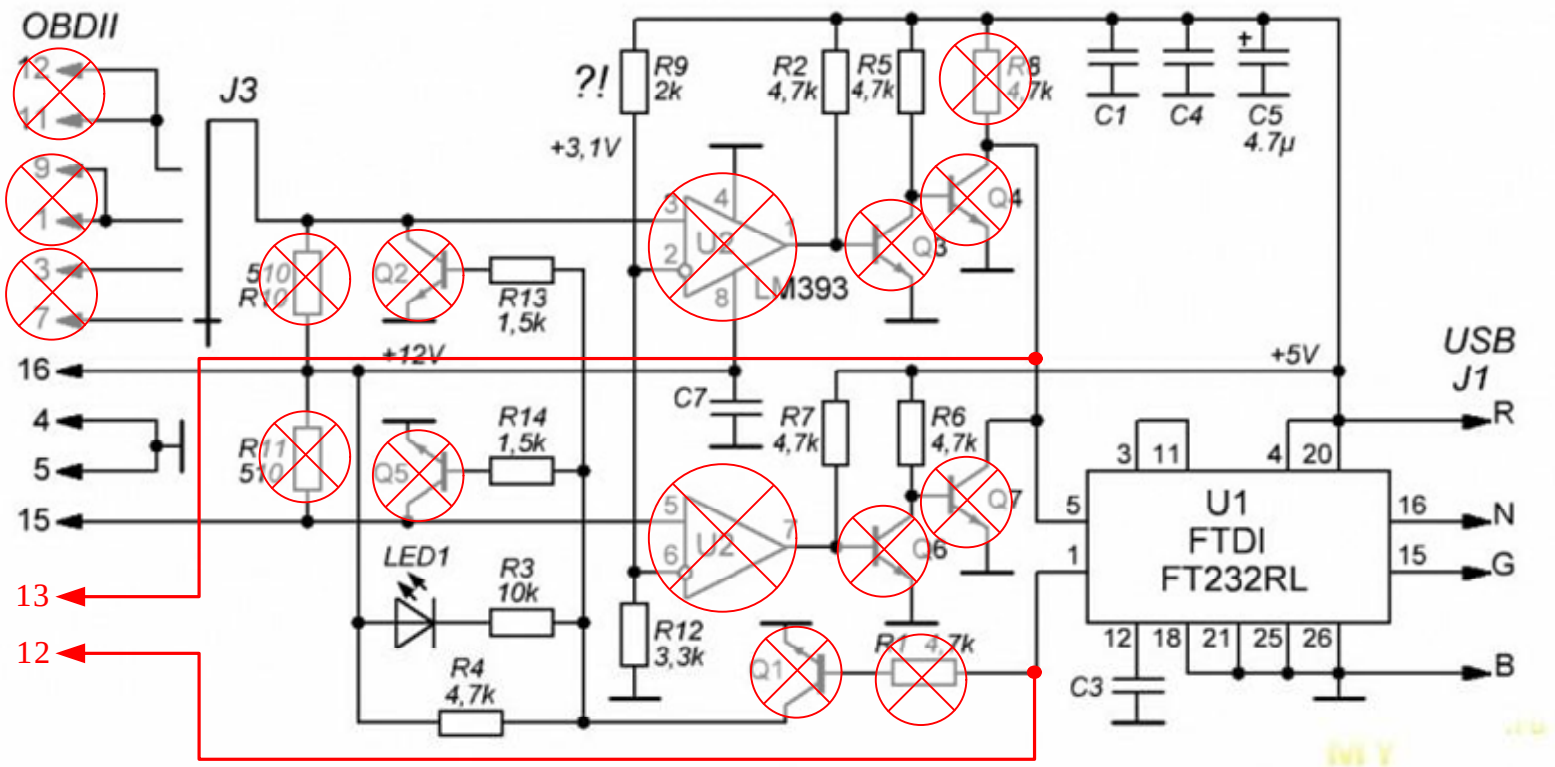

Modifying VAGKKL into SSM cable

1) Remove wire between 12,9,1,3,7 pin of ODB connector and PCB

2) Remove J3, U2, Q2, Q3, Q4, Q5, Q6, Q7, R1, R8, R10, R11

3) Tie R1 land (it connected to U1) and 12 pin of ODB connector.

4) Tie Q4 or Q7 collector land (it connected to U1) and 13pin of ODB connector